Unit 1

Introduction to Data Communication

[5 Hrs.]

1.1 Introduction to data communication

1.2 Data Transmission Modes (simplex, half-duplex, and full-duplex)

1.3 Fundamental Characteristics of Data Communication

1.4 Components of Data Communication System

1.5 Block Diagram of Digital Communication System

1.6 Introduction to Analog to Digital System

1.7 Advantages of digital transmission over Analog

1.8 Sampling Theorem/Nyquist Sampling Theorem

1.9 Numerical

1.10 Shannon Channel Capacity Theorem

1.11 Bit Rate Vs Baud Rate

1.12 Numerical

1.13 Line Coding (Unipolar, Polar and Bi-Polar)

Sanjeev Thapa, Er. DevOps, SRE, CKA, RHCSA, RHCE, RHCSA-Openstack, MTCNA, MTCTCE, UBSRS, HEv6, Research Evangelist

Let's see what the history does?

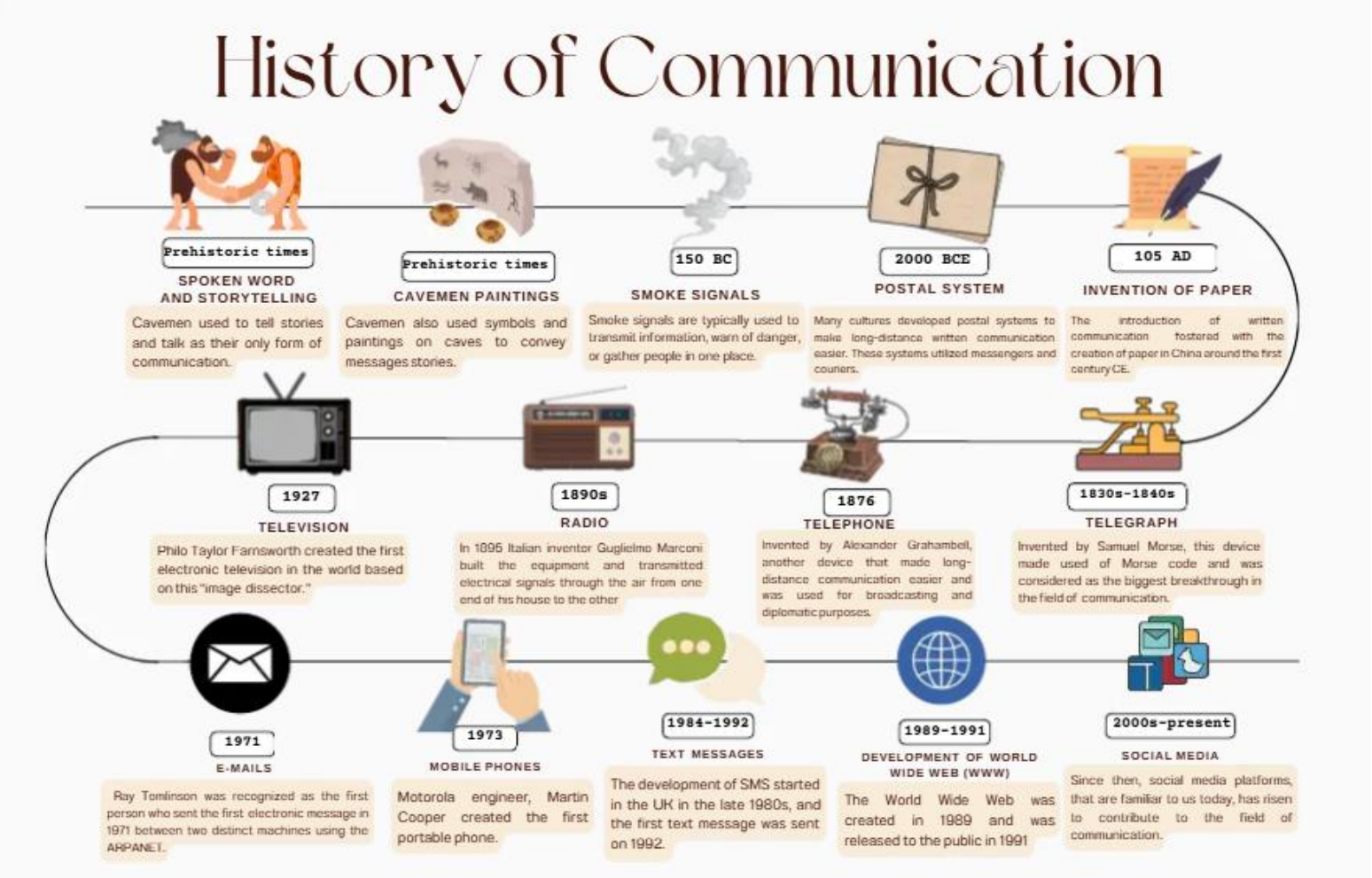

https://github.com/sanjeevlcc/notes_2081/blob/main/Cryptography/Notes_Annapurna/Circle_notes/Unit%201%20Introduction%20and%20Classical%20Ciphers%20(1).pdf

Page 21-26

Introduction to data communication

Source → Transmitter → Transmission System → Receiver → Destination

1. Source The **source** is the device or part that generates the message or data. Examples: • computer • keyboard • sensor • microphone It produces the original information to be sent.	**2. Transmitter** The **transmitter** converts the data from the source into a form suitable for transmission. Its functions may include: • encoding • modulation • signal conversion • amplification It prepares the message so it can travel through the communication channel.
3. Transmission System The **transmission system** is the medium or path through which the data travels from sender to receiver. Examples: • telephone line • fiber optic cable • wireless channel • network system This is the actual communication link between both sides.	**4. Receiver** The **receiver** accepts the signal coming from the transmission system and converts it back into usable data. Its functions may include: • demodulation • decoding • reconstruction of signal It recovers the original message from the received signal.
5. Destination The **destination** is the final point where the message is delivered. Examples: • computer	

• server • printer • user terminal This is where the transmitted information is finally used.	

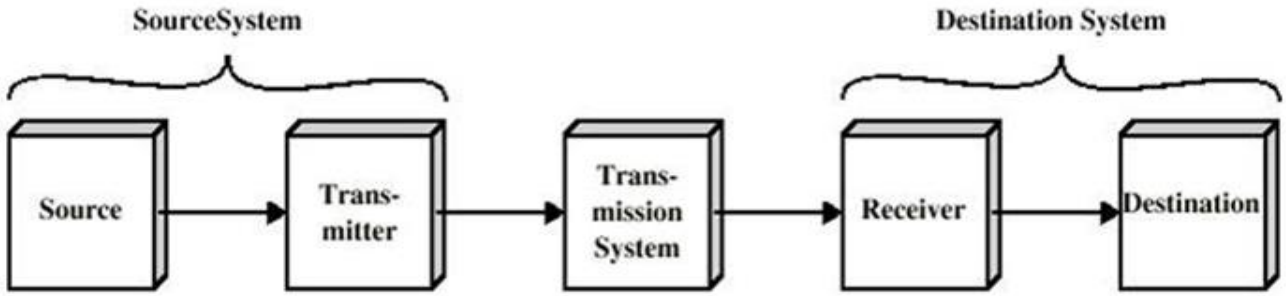

(a) General block diagram

(b) Example

Example shown in the figure

Workstation → Modem → Public Telephone Network → Modem → Server

This is a real-life example of the general block diagram.

Explanation:

1. Workstation The workstation acts as the **source**. It creates the data that needs to be sent.	**2. Modem at sender side** The modem acts as the **transmitter**. It converts digital data from the workstation into signals suitable for the telephone network.

3. Public Telephone Network This is the **transmission system**. It carries the signal from one place to another.	**4. Modem at receiver side** This modem acts as the **receiver**. It converts the received signal back into digital data.
5. Server The server acts as the **destination**. It receives and uses the transmitted data.	

Data Transmission Modes

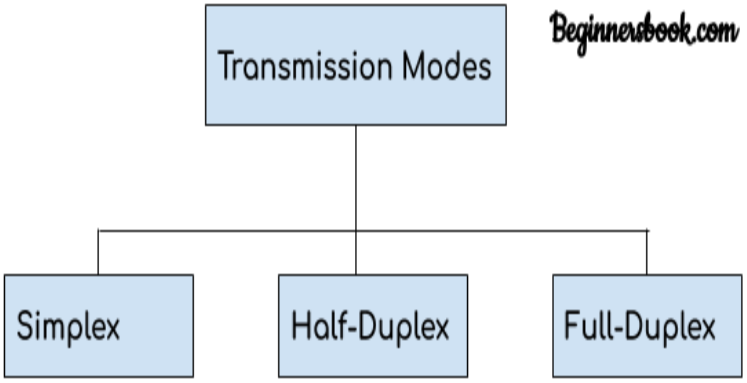

Data transmission mode means the direction in which data flows between two communicating devices. It tells whether data can travel in one direction only or in both directions.

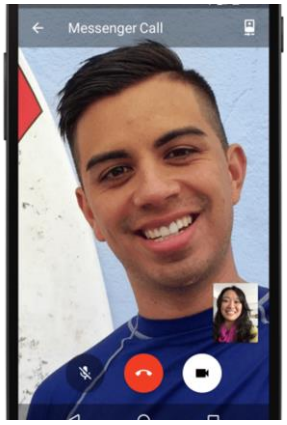

Mode	Direction of Data Flow	Simultaneous Communication	Example
Simplex	One direction only	No	Keyboard to computer
Half-Duplex	Both directions	No	Walkie-talkie
Full-Duplex	Both directions	Yes	Telephone

This figure shows the **three data transmission modes**:

1. Simplex

In **simplex mode**, data moves in **only one direction**.

In the figure:

- data goes from **Mainframe** to **Monitor**
- the monitor only receives
- the mainframe only sends

So, communication is **one-way only**.

Example:

- keyboard to computer
- TV broadcast

Meaning of the arrow:
The arrow points in only one direction, showing that data cannot return back.

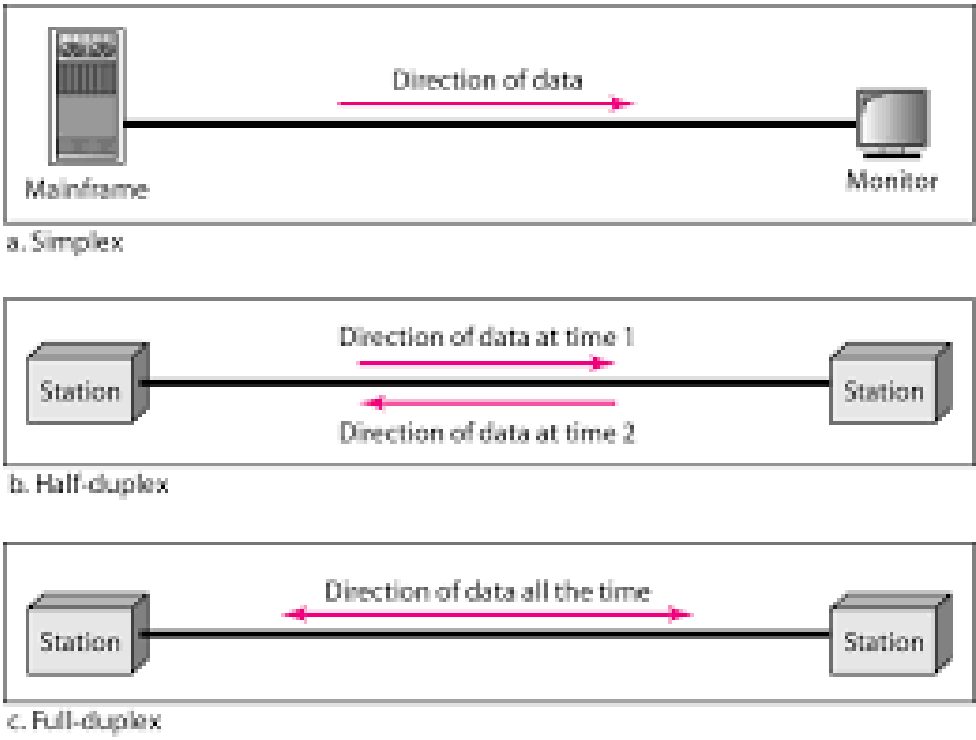

2. Half-Duplex

In **half-duplex mode**, data can move in **both directions**, but **not at the same time**.

In the figure:

- one station sends data at one time
- the other station sends later
- both cannot transmit together

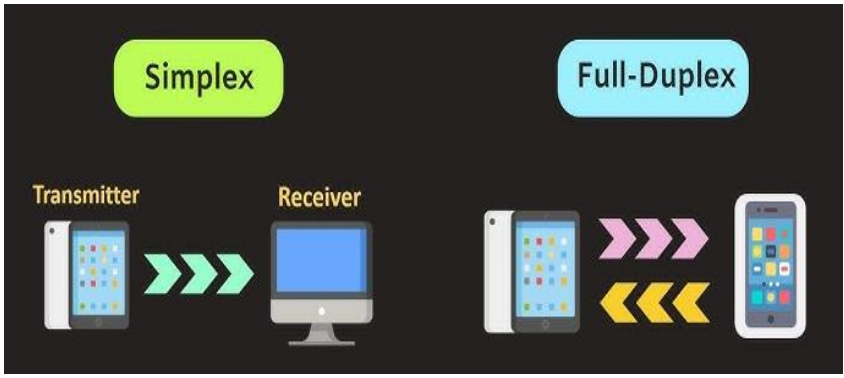

So, communication is **two-way, but alternate**.

Example:

- walkie-talkie

Meaning of the arrows:
The arrows show data in both directions, but at different times.

3. Full-Duplex

In **full-duplex mode**, data moves in **both directions at the same time**.

In the figure:

- both stations can send and receive continuously
- communication happens simultaneously

So, communication is **two-way and simultaneous**.

Example:

- telephone
- mobile call

Meaning of the arrows:
The arrows in opposite directions at the same time show simultaneous communication.

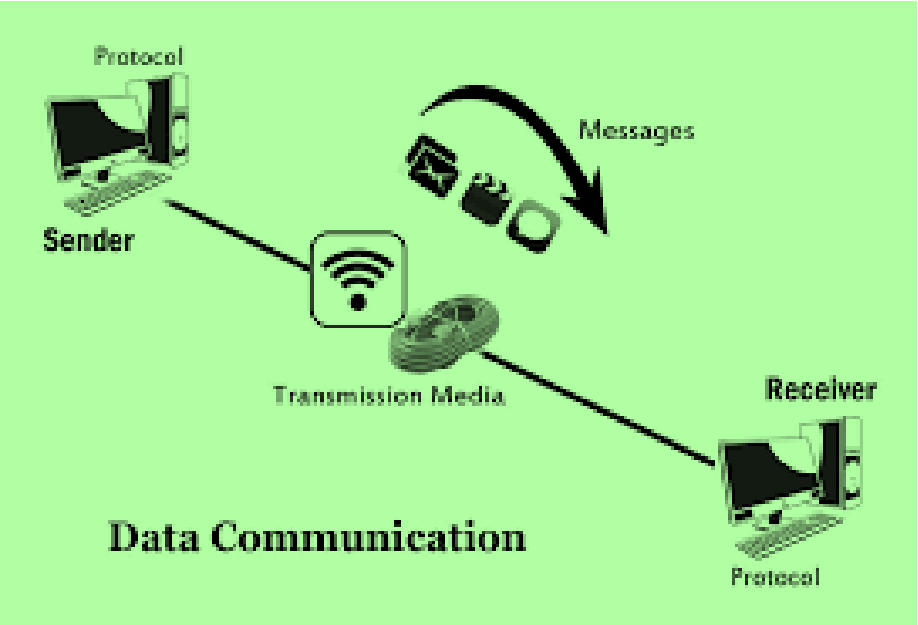

Sender is the source device that sends data. Examples: • computer • mobile phone • server • keyboard	**Receiver** is the destination device that accepts data. Examples: • computer • printer • monitor • smartphone

Example

A sender sends a message of **10 bits** to a receiver.

Sent data = **1 0 1 1 0 0 1 1 0 1**
Received data = **1 0 1 1 0 0 0 1 0 1**

Comparison:

- Total bits sent = 10
- Correct bits received = 9
- Error bits = 1

Accuracy:
9/10 × 100 = 90%

If this message should arrive in **1 second** but arrives in **3 seconds**:
Delay = **2 seconds**

If packet times are 1 sec, 1.2 sec, 1.8 sec:
Jitter exists because packet arrival time is not equal.

```
C:\Users\Huma>ping google.com

Pinging google.com [2404:6800:4002:808::200e] with 32 bytes of data:
Reply from 2404:6800:4002:808::200e: time=40ms
Reply from 2404:6800:4002:808::200e: time=42ms
Reply from 2404:6800:4002:808::200e: time=32ms
Reply from 2404:6800:4002:808::200e: time=31ms

Ping statistics for 2404:6800:4002:808::200e:
    Packets: Sent = 4, Received = 4, Lost = 0 (0% loss),
Approximate round trip times in milli-seconds:
    Minimum = 31ms, Maximum = 42ms, Average = 36ms
```

For successful communication between sender and receiver, the following fundamental characteristics are necessary.

1. **Delivery**

Delivery means the data must reach the **correct receiver**.

If the sender sends data but it goes to the wrong destination, then communication is not successful.

Example:

A teacher sends marks to Student A, but Student B receives them.
This is wrong delivery.

Small numerical idea:

If a sender sends data to **1 correct receiver** out of **5 wrong devices**, communication is successful only when it reaches the **intended 1 receiver**.

So,
Correct delivery = 1/1 required destination

2. Accuracy

Accuracy means the data received must be exactly the same as the data sent.

If sender sends:
101101
and receiver gets:
101001

then an error has occurred, so communication is not accurate.

Small numerical:

Sender sends = 8 bits
Receiver receives correctly = 7 bits
Error bits = 1 bit

So,
Accuracy = Correct bits / Total bits × 100
Accuracy = 7/8 × 100 = 87.5%

3. Timeliness

Timeliness means the data must arrive at the receiver at the proper time.

If data arrives too late, it may become useless, especially in:

- live video
- voice call

- online meeting
- hospital monitoring system

Small numerical:

Suppose data should arrive in **2 seconds**, but it arrives in **5 seconds**.

Delay = 5 - 2 = **3 seconds**

So communication is not timely.

4. Jitter

Jitter means the variation in the arrival time of packets at the receiver.

```
C:\Users\Huma>ping google.com

Pinging google.com [2404:6800:4002:808::200e] with 32 bytes of data:
Reply from 2404:6800:4002:808::200e: time=40ms
Reply from 2404:6800:4002:808::200e: time=42ms
Reply from 2404:6800:4002:808::200e: time=32ms
Reply from 2404:6800:4002:808::200e: time=31ms

Ping statistics for 2404:6800:4002:808::200e:
    Packets: Sent = 4, Received = 4, Lost = 0 (0% loss),
Approximate round trip times in milli-seconds:
    Minimum = 31ms, Maximum = 42ms, Average = 36ms
```

If one packet arrives in 1 second, another in 2 seconds, and another in 1.5 seconds, then there is variation in timing.

This affects:

- voice quality
- video quality
- real-time streaming

Small numerical:

Packet 1 arrival time = 1 sec
Packet 2 arrival time = 2 sec
Packet 3 arrival time = 1.5 sec

Difference between packet times shows **jitter**.

Maximum variation:
2 - 1 = **1 second**

So, jitter = **1 second variation**

Components of Data Communication System (Model)

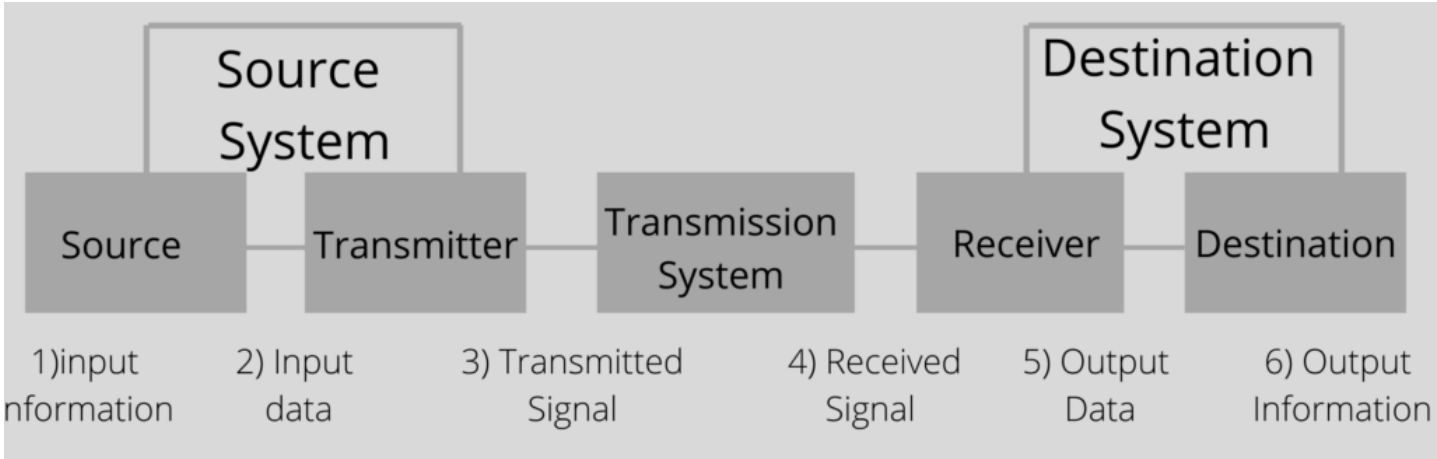

Source → Transmitter → Transmission System → Receiver → Destination

It explains how data moves from one system to another.

1. Source The **source** is the starting point of communication. It generates the original information. In the figure, it is shown as: **1) Input Information** That means the message begins here. **Example:** • keyboard input • voice from microphone • text typed in computer	**2. Transmitter** The **transmitter** takes the input data from the source and converts it into a signal that can be sent through the transmission medium. In the figure, it is shown as: **2) Input data** **3) Transmitted Signal** So, the transmitter changes the message into a suitable form for transmission. **Example:** • modem • network card • encoder
3. Transmission System The **transmission system** is the path or medium through which the transmitted signal travels.	**4. Receiver** The **receiver** accepts the signal coming from the transmission system and converts it back into usable data.

It carries the signal from sender side to receiver side. **Example:** • cable • fiber optic • telephone line • wireless channel	In the figure, it is shown as: **4) Received Signal** **5) Output Data** The receiver recovers the original information from the received signal. **Example:** • modem • decoder • network interface device
5. Destination The **destination** is the final point where the information reaches. In the figure, it is shown as: **6) Output Information** This is the final user or device that uses the message. **Example:** • computer screen • printer • server • user terminal	

Block Diagram of Digital Communication System

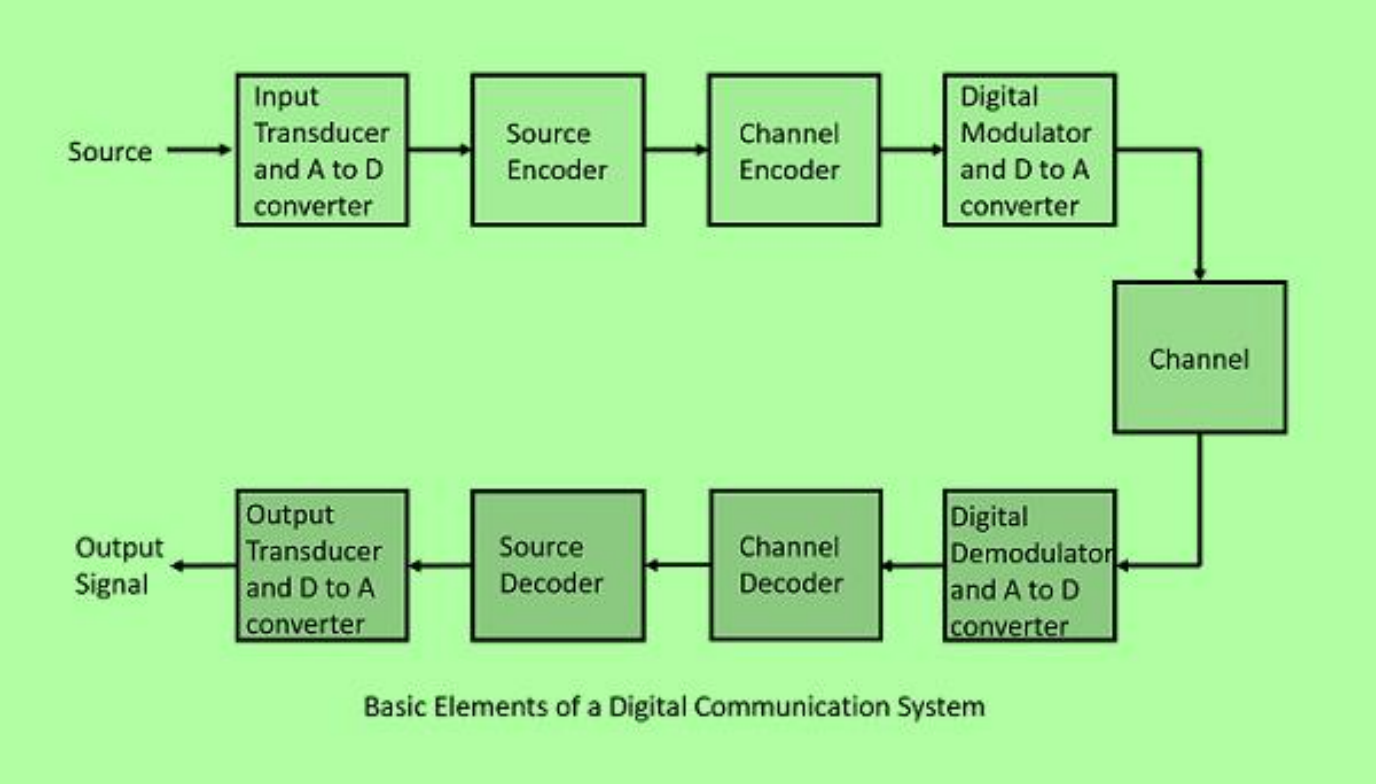

Explanation of Each Block		
1. Source The **source** is the origin of information. It produces the original message or data to be transmitted. **Examples:** • human voice • image • text • video	**2. Input Transducer and A to D Converter** This block performs two functions: **a. Input Transducer** It converts physical information into an electrical signal. **Examples:** • microphone converts sound into electrical signal	**3. Source Encoder** The **source encoder** converts the digital data into a suitable form for efficient transmission. Its main functions are: • remove unnecessary or redundant information • compress the data • represent the message efficiently

	• camera converts image into electrical signal **b. A to D Converter** It converts the analog electrical signal into digital form. So, if the source signal is analog, this block changes it into digital data.	This helps in reducing the amount of data to be transmitted.
4. Channel Encoder The **channel encoder** adds extra bits to the data. These extra bits help in: • detecting errors • correcting errors during transmission So, channel encoding improves reliability.	**5. Digital Modulator and D to A Converter** This block prepares the encoded digital signal for transmission through the channel. **Functions:** • modulates the digital data • converts digital data into a signal suitable for the channel • D to A conversion may be used when needed for transmission This block makes the signal ready to travel through the communication medium.	**6. Channel** The **channel** is the communication path through which the signal travels from sender to receiver. **Examples:** • wire • fiber optic cable • air • wireless medium Noise may affect the signal in the channel.
7. Digital Demodulator and A to D Converter This block is present at the receiver side. Its functions are: • receive the transmitted signal • demodulate it	**8. Channel Decoder** The **channel decoder** checks the received data for errors. Its functions are: • detect transmission errors • correct errors if possible	**9. Source Decoder** The **source decoder** reconstructs the original information from the encoded data. It performs the reverse operation of source encoding. Its functions are: • remove compression effects

• convert it back into digital form It recovers the encoded digital data from the received signal.	• recover the original encoded data This is the reverse operation of the channel encoder.	• restore the original message form
10. Output Transducer and D to A Converter This block converts digital data back into useful output form. **a. D to A Converter** Converts digital data into analog signal if required. **b. Output Transducer** Converts electrical signal into physical form. **Examples:** • speaker converts electrical signal into sound • monitor displays image/video	**11. Output Signal** This is the final information obtained at the receiver side. It is the reconstructed form of the original source message.	

Introduction to Analog to Digital System

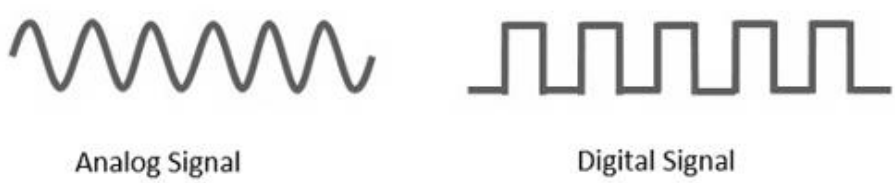

Representation of Signals

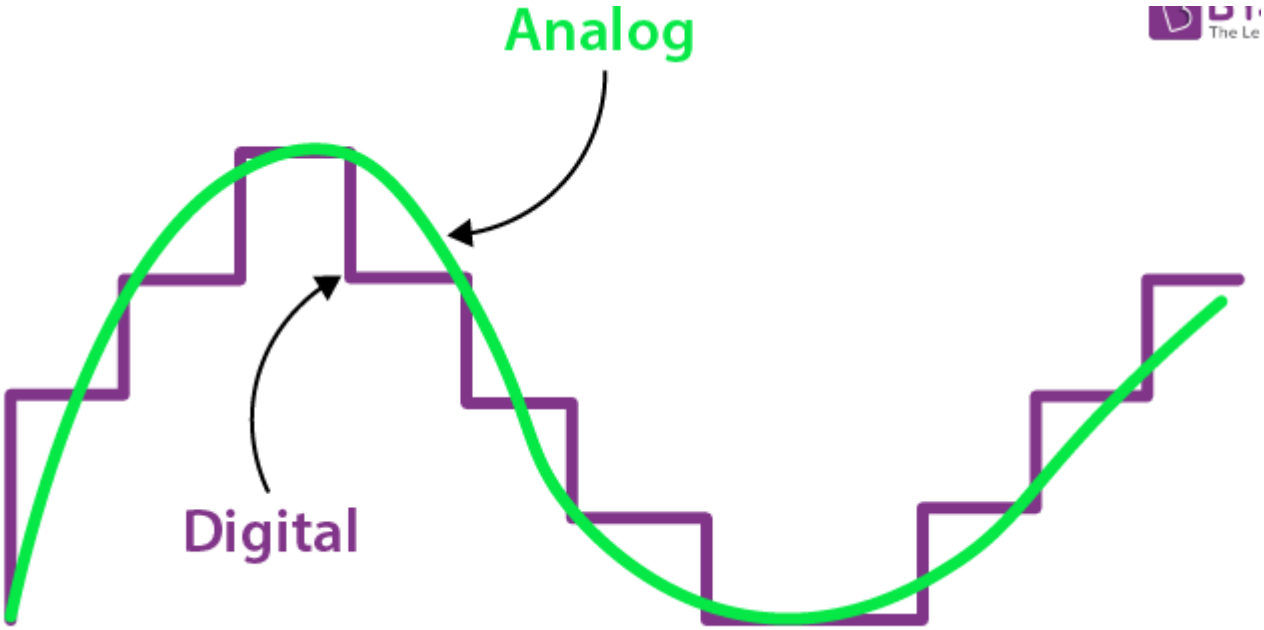

Let's Check for AND , OR , NOT , X-OR etc.

An **Analog to Digital System** is a system that converts an **analog signal** into a **digital signal** so that it can be processed, stored, and transmitted by digital devices such as computers and communication systems.

In real life, most natural signals are **analog** in nature, but computers and digital systems work with **digital data**. Therefore, analog signals must be converted into digital form.

1. Analog Signal

An **analog signal** is a continuous signal that changes smoothly with time.

It can have an infinite number of values within a given range.

Examples:

- human voice
- temperature
- sound waves
- light intensity
- pressure

Characteristics of analog signal

- continuous in time
- continuous in amplitude
- more affected by noise
- difficult to store and process directly in computers

2. Digital Signal

A **digital signal** is a discrete signal that has limited values, usually represented by **0 and 1**.

Digital systems understand binary data, so digital signals are more suitable for computers and modern communication.

Examples:

- computer data
- binary numbers
- digital audio files
- digital images

Characteristics of digital signal

- discrete in nature
- represented by binary digits
- less affected by noise
- easy to store, process, and transmit

3. Need for Analog to Digital Conversion

Analog to digital conversion is necessary because:

- computers work only with digital data
- digital signals are easier to store
- digital signals are less affected by noise
- digital systems allow better error detection and correction

- digital transmission is more reliable
- digital data can be processed easily using software

4. Basic Steps of Analog to Digital Conversion [IMP]

1) Sampling

Sampling means taking the value of the analog signal at regular intervals of time.

Instead of sending the complete continuous signal, only selected values are taken.

Example:

If voice signal is measured every small fraction of a second, each measurement is called a sample.

2) Quantization

Quantization means assigning each sampled value to the nearest fixed digital level.

Since digital systems cannot store infinite values, the sample values are rounded to the nearest available level.

Example:

If a sample value is 4.7, it may be quantized to 5.

3) Encoding

Encoding means converting the quantized values into binary form.

After quantization, each level is represented by a binary number.

Example:

If the quantized level is 5, it may be represented in binary as 101.

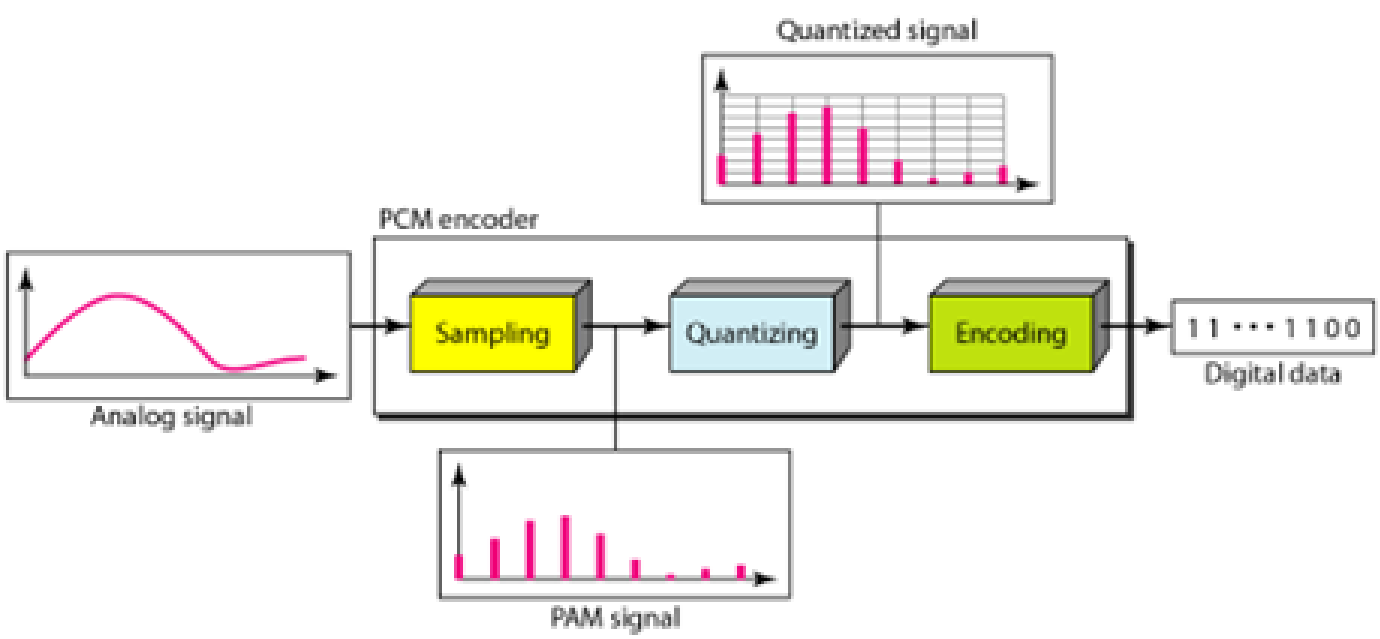

Flow shown in the diagram

Analog signal → Sampling → Quantizing → Encoding → Digital data

It explains how a continuous analog signal is converted into binary digital data.

1. Analog Signal

The process starts with an **analog signal**.

An analog signal is:

- continuous in time
- continuous in amplitude
- smooth in shape

Example:

- human voice
- music signal
- temperature signal

In the figure, the left-side waveform is the original analog signal.

2. PCM Encoder

The diagram shows a **PCM encoder**.

PCM stands for **Pulse Code Modulation**.
It is a common method used to convert analog signals into digital form.

The PCM encoder has three main steps:

1. **Sampling**
2. **Quantizing**
3. **Encoding**

3. Sampling

In **sampling**, the value of the analog signal is taken at regular time intervals.

Instead of taking every point of the continuous wave, only selected points are measured.

The result of sampling is shown as a **PAM signal**.

PAM Signal

PAM stands for **Pulse Amplitude Modulation**.

In PAM:

- each pulse represents one sample
- pulse height shows the signal amplitude at that instant

So, after sampling, the continuous analog wave becomes a series of pulses.

4. Quantizing

After sampling, the sampled values may have many different amplitudes.

In **quantizing**, each sample value is rounded or assigned to the nearest fixed level.

This means:

- exact analog values are replaced by approximate discrete levels
- infinite values become limited levels

The output is called the **quantized signal**.

In the figure, the quantized signal is shown at the top right.

5. Encoding

After quantization, each quantized level is converted into a binary code.

This step is called **encoding**.

For example:

- one level may be represented as 001
- another as 010
- another as 111

Thus, each quantized sample becomes a group of binary bits.

The final output becomes **digital data**.

In the figure, this is shown as:
1 1 . . . 1 1 0 0

Numerical on Analog to Digital Conversion

Suppose an analog signal is sampled and gives the following sample values:

Sample values:
2.2 V, 4.7 V, 6.1 V, 7.8 V

Assume the quantization levels are whole numbers only:

Allowed levels:
0, 1, 2, 3, 4, 5, 6, 7, 8

Now we do the three steps:

1. Sampling

The analog signal is measured at different time intervals.

So the sampled values are:

2.2 V, 4.7 V, 6.1 V, 7.8 V

2. Quantization

Each sampled value is rounded to the nearest fixed level.

- 2.2 V → 2
- 4.7 V → 5
- 6.1 V → 6
- 7.8 V → 8

So, the **quantized values** are:

	2, 5, 6, 8
3. Encoding Now each quantized value is converted into binary. Using 4-bit binary: • 2 = 0010 • 5 = 0101 • 6 = 0110 • 8 = 1000 **So the final digital output is:** **0010 0101 0110 1000**	**Final Answer** Analog sample values = **2.2, 4.7, 6.1, 7.8** Quantized values = **2, 5, 6, 8** Encoded binary output = **0010 0101 0110 1000**

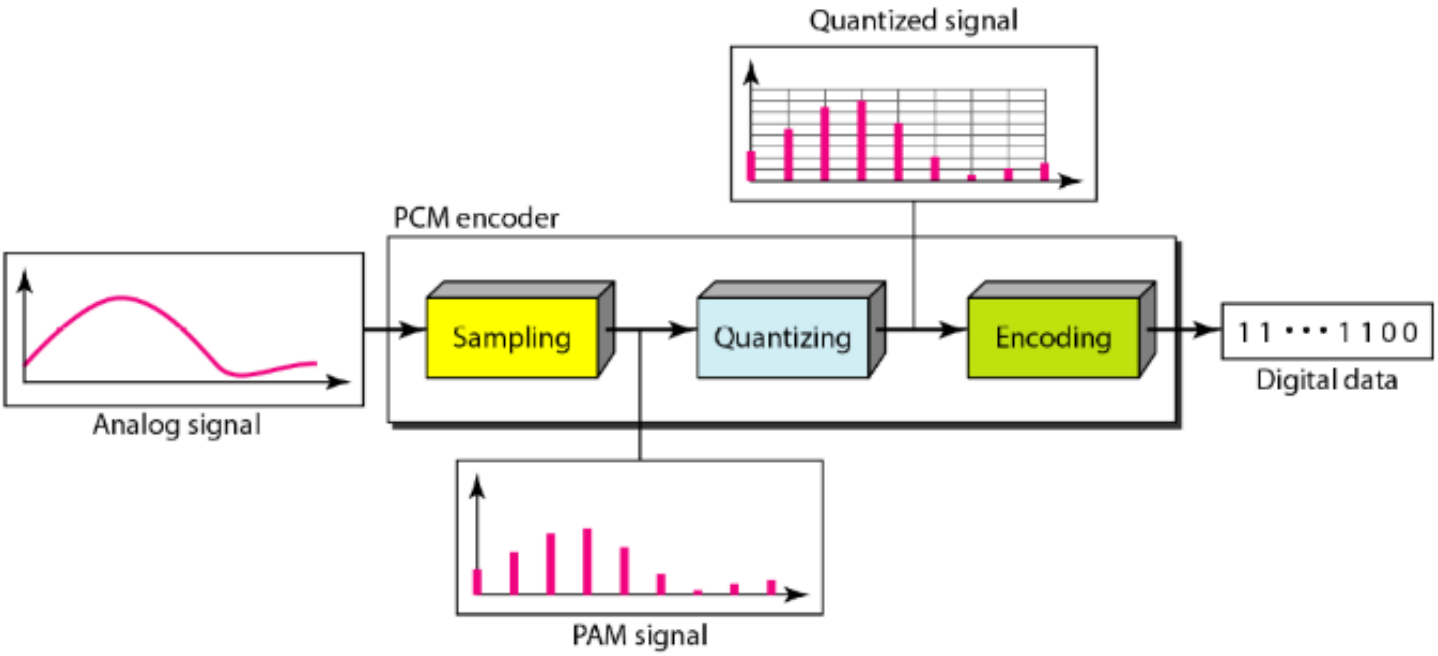

Advantages of digital transmission over Analog

Digital transmission sends data in the form of **0 and 1**, while analog transmission sends data in the form of **continuous waveforms**.

Because of this, digital transmission has many practical advantages.

1. Less Effect of Noise In analog transmission, if noise enters the signal, the original waveform changes directly. **Example with data:** Suppose original analog voltage = **5.0 V** Noise added = **0.8 V** Received signal = **5.8 V** So the signal changes. But in digital transmission, assume: • **0 = 0 V** • **1 = 5 V** If sent bit = **1 (5 V)** and noise changes it to **4.4 V**, the receiver still detects it as **1**. So digital signal can still be recovered correctly. **Simple understanding:** • Analog: signal shape changes • Digital: bit can still be recognized	**2. Easy Error Detection and Correction** Digital systems can detect errors by using extra bits. **Example with data:** Sent data = **1011001** Suppose one parity bit is added: Total data sent = **10110011** If receiver gets: **10100011** Then it can detect that an error occurred. Analog systems do not easily support this kind of checking.
3. Better Quality over Long Distance Digital signals can be regenerated exactly by repeaters. **Example with data:** Original digital pulses: • 1 = 5 V	**4. Easy Storage** Digital data can be stored exactly in binary form. **Example with data:** A text message: **HELLO**

- 0 = 0 V

After long distance, received values may become:

- 1 becomes **4.1 V**
- 0 becomes **0.7 V**

A repeater restores them back to:

- 1 = **5 V**
- 0 = **0 V**

But in analog transmission:

Original signal amplitude = **10 V**
After attenuation = **6 V**
Noise added = **1.5 V**

Amplifier output = **7.5 V**, but noise is also amplified.

So analog quality keeps degrading.

In digital form, it can be stored as binary codes like:

- H = 01001000
- E = 01000101
- L = 01001100
- L = 01001100
- O = 01001111

This can be stored in:

- RAM
- hard disk
- SSD
- pen drive

Analog signals need tapes or special continuous storage methods.

5. Easy Processing

Digital data can be edited and processed by computer software.

Example with data:

Digital audio file size = **10 MB**

It can be:

- compressed to **3 MB**
- encrypted
- copied without quality loss
- filtered by software

Analog audio copied many times loses quality

6. Higher Reliability

Digital systems are more reliable because small changes do not always change the meaning of the bits.

Example with data:

Let receiver decision rule be:

- voltage above **2.5 V** = bit 1
- voltage below **2.5 V** = bit 0

If sent bit is 1 at **5 V**, and received at:

- 4.8 V
- 4.1 V
- 3.0 V

All are still read as **1**.

This makes digital communication more reliable.

7. Better Security

Digital data can be encrypted easily.

Example with data:

Original data:
11010101

After encryption, it may become:
01100110

So even if someone intercepts it, they cannot understand the original data easily.

Analog signals are harder to secure in this way.

8. Easy Multiplexing

Many digital signals can be combined into one transmission channel.

Example with data:

Suppose 4 users each need:

- **64 kbps**

Total digital bandwidth required:
4 × 64 kbps = 256 kbps

These can be combined and transmitted together efficiently.

This is easier in digital systems than analog ones.

9. Compatible with Computers

Computers work only with binary data.

Example:

If a sensor reads temperature = **29°C**, it can be stored digitally as binary data and sent directly to a computer.

Digital data can be used in:

- computer networks
- internet
- mobile communication
- databases

Analog data must be converted first.

10. Supports Compression

Digital data can be compressed to reduce size.

Example with data:

A raw image file = **20 MB**
After compression = **4 MB**

A raw audio file = **50 MB**
After MP3 compression = **5 MB**

This saves:

- storage space
- transmission time
- bandwidth

Analog transmission cannot do this easily.

Sampling Theorem (Nyquist Sampling Theorem)

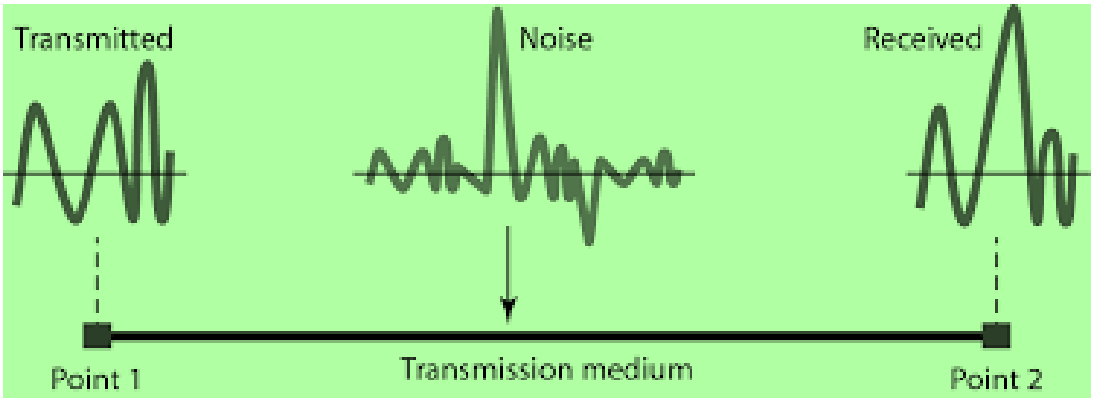

The **Sampling Theorem**, also called the **Nyquist Sampling Theorem**, is one of the most important concepts in digital communication.

It explains **how an analog signal can be converted into digital form without losing information**.

Analogy

Think of a song being played.

If you record only **one sound point every few seconds**, the song will not sound correct.
But if you record the sound **many times every second**, the song can be reproduced properly.

That is exactly what the Nyquist theorem says:
You must take samples fast enough.

Basic Idea

An **analog signal** is continuous.
A **digital system** cannot directly understand a continuous signal, so we take its values at regular intervals. This process is called **sampling**.

The theorem says:

A continuous-time signal can be completely reconstructed if it is sampled at a rate greater than or equal to twice the highest frequency present in the signal.

Formula:

fs >= 2fm

Where:

- **fs** = sampling frequency
- **fm** = maximum frequency of the signal

The value **2fm** is called the **Nyquist Rate**.

imple Analogy

Imagine a moving car on a road.

If you take **very few photos**, you may miss important positions of the car.
If you take **enough photos at regular intervals**, you can understand exactly how the car moved.

In the same way:

- the analog signal is like the moving car
- the samples are like the photos
- if you take too few samples, the real shape of the signal is lost
- if you take enough samples, the original signal can be reconstructed

So, **sampling is like taking snapshots of a continuous signal**.

Statement of Nyquist Sampling Theorem

If an analog signal contains a maximum frequency **fm**, then the minimum sampling frequency required is:

fs = 2fm

If we sample below this rate, distortion occurs. This distortion is called **aliasing**.

Meaning of Aliasing

Aliasing happens when the sampling frequency is too low.

Then:

- different signal components overlap
- the receiver gets the wrong shape of the signal
- original signal cannot be recovered correctly

Simple idea:

If you watch a fan rotating under a camera, sometimes it appears to rotate slowly or backward.

Why "twice the highest frequency"?

Suppose a signal has a highest frequency of **5 kHz**.

To capture its waveform correctly, at least **two samples per cycle** are required.

So:
fs >= 2 x 5 kHz = 10 kHz

That is why the minimum sampling rate must be twice the highest signal frequency.

This happens because the camera is not taking enough frames per second.

That is a real-life example of **aliasing**.

Important Terms

a. Sampling Frequency

The number of samples taken per second.

Unit:
Hz or **samples/sec**

b. Maximum Frequency

The highest frequency component present in the analog signal.

c. Nyquist Rate

The minimum required sampling frequency.

Nyquist Rate = 2fm

d. Nyquist Interval

The time interval between two samples.

Nyquist Interval = 1 / fs

Practical Example

Human voice in telephone systems is usually limited to about **4 kHz**.

So the minimum sampling rate should be:

fs = 2 x 4 kHz = 8 kHz

That is why telephone voice is commonly sampled at **8,000 samples per second**.

Conditions

Case 1: fs > 2fm

Sampling is more than Nyquist rate.
Signal can be reconstructed properly.

Case 2: fs = 2fm

Sampling is exactly at Nyquist rate.
Signal can still be reconstructed.

Case 3: fs < 2fm

Sampling is below Nyquist rate.
Aliasing occurs.
Signal cannot be reconstructed correctly.

Numerical 1: Basic

A signal has maximum frequency **3 kHz**. Find the minimum sampling frequency.

Solution:

Given:
fm = 3 kHz

Using:
fs >= 2fm

fs >= 2 x 3
fs >= 6 kHz

Answer:

Minimum sampling frequency = 6 kHz

Numerical 2: Basic

A signal has maximum frequency **7 kHz**. What is the Nyquist rate?

Solution:

Nyquist rate = 2fm

= 2 x 7
= 14 kHz

Answer:

Nyquist rate = 14 kHz

Numerical 3: Intermediate

An analog signal is sampled at **16 kHz**. Find the maximum signal frequency that can be reconstructed correctly.

Solution:

Given:
fs = 16 kHz

Using:
fm = fs / 2

fm = 16 / 2
fm = 8 kHz

Answer:

Maximum signal frequency = 8 kHz

Numerical 4: Intermediate

A signal contains frequencies up to **10 kHz**. It is sampled at **15 kHz**. Is the sampling sufficient?

Solution:

Given:
fm = 10 kHz
fs = 15 kHz

Required Nyquist rate:
fs >= 2fm
fs >= 2 x 10
fs >= 20 kHz

Actual sampling frequency = 15 kHz

Since:
15 kHz < 20 kHz

Sampling is not sufficient.

Answer:

No, the sampling is insufficient and aliasing may occur.

Shannon Channel Capacity Theorem

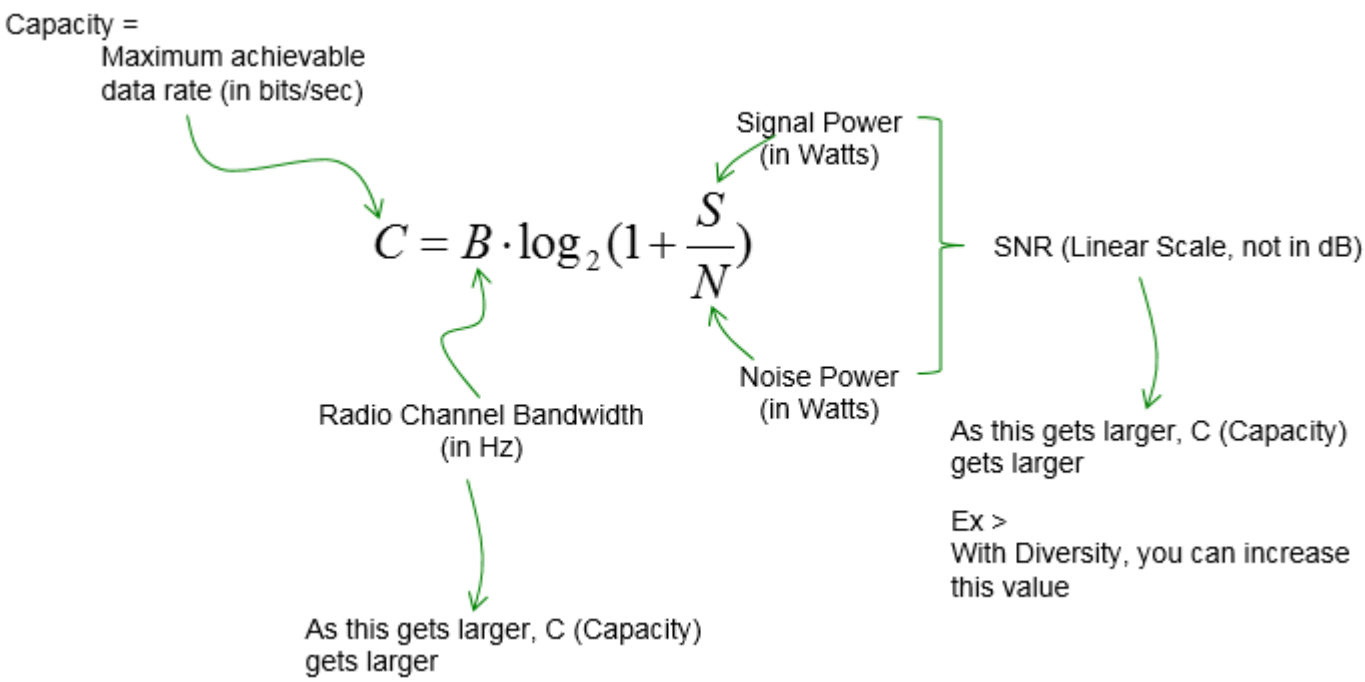

The **Shannon Channel Capacity Theorem** tells us the **maximum amount of data** that can be sent through a communication channel **without error**, even when **noise** is present.

In simple words, it gives the **highest possible data rate** for a noisy channel.

Basic Idea

Every communication channel has some limits.

If we try to send data too fast:

- errors increase
- receiver cannot understand properly
- signal quality becomes poor

Shannon theorem tells the **safe upper limit** of data transmission.

Simple Analogy

Imagine a **water pipe**.

- The **width of the pipe** is like **bandwidth**
- The **dirt or blockage in the pipe** is like **noise**
- The **amount of water flowing** is like **data rate**

If the pipe is wide, more water can pass.
If the pipe is dirty or blocked, less water can pass smoothly.

So:

- **more bandwidth** means more capacity
- **more noise** means less capacity

That is exactly the idea of Shannon theorem.

Statement of Shannon Channel Capacity Theorem

The maximum capacity of a noisy channel is:

C = B log2(1 + S/N)

Where:

- **C** = channel capacity in bits per second (bps)
- **B** = bandwidth of the channel in hertz (Hz)
- **S/N** = signal-to-noise ratio

Understanding the Formula

C = B log2(1 + S/N)

From this formula:

If bandwidth increases:

Capacity increases

If signal-to-noise ratio increases:

Capacity also increases

If noise increases:

S/N decreases, so capacity decreases

Meaning of Each Term

a. Channel Capacity (C)

This is the **maximum data rate** that can be transmitted reliably.

Unit:
bits per second (bps)

b. Bandwidth (B)

Bandwidth is the range of frequencies a channel can carry.

Unit:
Hz

Greater bandwidth means the channel can carry more information.

c. Signal-to-Noise Ratio (S/N)

This compares the strength of the signal to the strength of the noise.

- higher S/N means cleaner signal
- lower S/N means more noisy signal

A higher S/N gives better communication quality.

Simple Real-Life Meaning

Suppose you are trying to talk to someone in a quiet room and in a crowded market.

- In a **quiet room**, the noise is low, so communication is clear
- In a **crowded market**, the noise is high, so communication is difficult

So in communication channels too:

- low noise = better capacity
- high noise = lower capacity

Numerical 1: Basic

A channel has bandwidth **3000 Hz** and signal-to-noise ratio **3**. Find the channel capacity.

Solution:

Given:
B = 3000 Hz
S/N = 3

Formula:
C = B log2(1 + S/N)

C = 3000 log2(1 + 3)
C = 3000 log2(4)
C = 3000 x 2
C = 6000 bps

Answer:

Channel capacity = 6000 bps

Numerical 2: Basic

A channel has bandwidth **4000 Hz** and signal-to-noise ratio **15**. Find the capacity.

Solution:

Given:
B = 4000 Hz
S/N = 15

C = 4000 log2(1 + 15)
C = 4000 log2(16)
C = 4000 x 4
C = 16000 bps

Answer:

Channel capacity = 16000 bps

Numerical 3: Intermediate

A channel capacity is **18000 bps** and bandwidth is **3000 Hz**. Find **log2(1 + S/N)**.

Solution:

Given:
C = 18000 bps
B = 3000 Hz

Formula:
C = B log2(1 + S/N)

18000 = 3000 log2(1 + S/N)

log2(1 + S/N) = 18000 / 3000
log2(1 + S/N) = 6

Answer:

log2(1 + S/N) = 6

Question 1

Ram is the IT assistant of a school. He is checking a communication channel used for sending digital data between the office and the computer lab. The channel has a **bandwidth of 3000 Hz** and a **signal-to-noise ratio of 15**. Help Ram find the **maximum channel capacity** using Shannon's theorem.

Question 2

Sita and Hari are working on a network project in their college. They are testing a noisy communication channel that has a **bandwidth of 5000 Hz** and a **signal-to-noise ratio of 31**. Using Shannon's theorem, calculate the **maximum data rate** that can be transmitted through the channel.

If needed further:
1 + S/N = 64
S/N = 63

Bit Rate Vs Baud Rate

Analogy 1: Truck and Boxes

Imagine Ram owns a delivery truck.

- The **truck trips per hour** are like **baud rate**
- The **number of boxes carried in one trip** are like **bits per symbol**
- The **total boxes delivered per hour** are like **bit rate**

So:

- **Baud rate** = how many times the signal changes or symbols are sent per second
- **Bit rate** = how much actual data is sent per second

Formula:

Bit Rate = Baud Rate × Bits per Symbol

Example from analogy

Suppose:

- truck makes **100 trips**
- each trip carries **3 boxes**

Then total boxes delivered:

100 × 3 = 300 boxes

Analogy 2: Bus and Passengers

Think of a bus system.

- **Number of buses leaving per hour** = **baud rate**
- **Number of passengers in each bus** = **bits per symbol**
- **Total passengers carried per hour** = **bit rate**

If 1 bus carries 1 passenger:

- buses per hour = passengers per hour
- so baud rate = bit rate

If 1 bus carries 4 passengers:

- passengers per hour become much higher
- so bit rate becomes greater than baud rate

In the same way:

- baud rate = 100
- bits per symbol = 3
- bit rate = 300 bps

So, **baud rate tells how often something is sent**, while **bit rate tells how much actual data is sent**.

Note

Bit rate is the number of **bits transmitted per second**.

Baud rate is the number of **signal units or symbols transmitted per second**.

Main Formula:

Bit Rate = Baud Rate × Number of bits per symbol

Important idea:

- If **1 symbol carries 1 bit**, then
  Bit rate = Baud rate
- If **1 symbol carries more than 1 bit**, then
  Bit rate > Baud rate

Units:

- **Bit rate** = bps
- **Baud rate** = baud

Question 1

Ram is working in a computer network lab.
He is testing a modem that transmits data at **1200 baud**.
Each signal element carries **4 bits**.
Ram wants to know the **bit rate** of the modem.

Question:

Find the bit rate.

Solution:

Given:

- Baud Rate = **1200 baud**
- Bits per symbol = **4**

Formula:
Bit Rate = Baud Rate × Bits per symbol

So,
Bit Rate = 1200 × 4
Bit Rate = 4800 bps

Answer:

Bit rate = 4800 bps

Question 2

Sita is working in an internet company.
She finds that a communication system sends data at **9600 bps**.
Each symbol carries **3 bits**.
She wants to calculate the **baud rate** of the system.

Question:

Find the baud rate.

Question 3

Ram is working in a computer network lab. He is testing a modem that transmits data at **1200 baud**. If each signal element carries **4 bits**, calculate the **bit rate**.

Question 4

Solution: Given: • Bit Rate = **9600 bps** • Bits per symbol = **3** Formula: **Baud Rate = Bit Rate / Bits per symbol** So, **Baud Rate = 9600 / 3** **Baud Rate = 3200 baud** **Answer:** **Baud rate = 3200 baud**	Sita is working in an internet company. A communication system sends data at **9600 bps**. If each symbol carries **3 bits**, find the **baud rate**.

Line Coding (Unipolar, Polar and Bi-Polar)